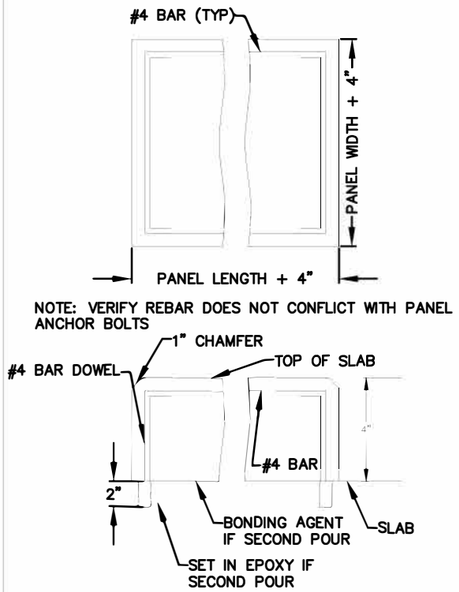

ELECTRICAL PANEL SLAB DETAIL
NTS

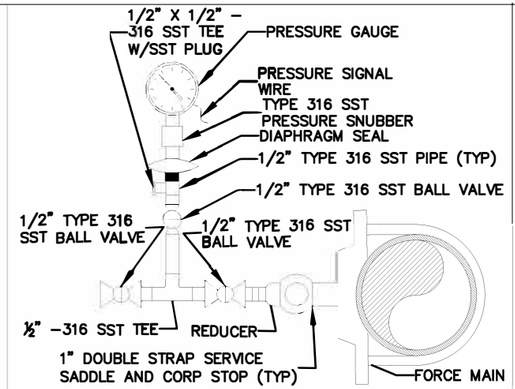

PRESSURE GAUGE: ASHCROFT 45–2279–SSH–04L–XX# OR APPROVED EQUAL
SNUBBER: ASHCROFT 50–1112SE
DIAPHRAGM SEAL: ASHCROFT TYPE 50–100SS–04T–XCG

NOTES:
1. TAP PIPE PER MANUFACTURER'S RECOMMENDATIONS AT SPRINGLINE.
2. ALL PIPE AND FITTINGS SHALL BE SCHEDULE 80 STAINLESS STEEL.
3. INSTALL PRESSURE GAUGE AND DIAPHRAGM SEAL PER MANUFACTURER'S REQUIREMENTS.
4. PRESSURE RANGE FOR GAUGE TO BE BASED ON OPERATING CONDITIONS.

PRESSURE GAUGE DETAIL
NTS

CITY OF MARGATE, FLORIDA
DEPARTMENT OF ENVIRONMENTAL AND ENGINEERING SERVICES

DATE: 08/24

DRAWN: KHA

LIFT STATION
STANDARD DETAILS

M-8